MALE END VIEW (CCW)

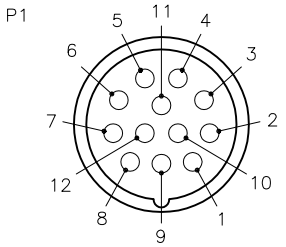

PAIR 1 — 1 = GREEN, 2 = YELLOW
PAIR 2 — 3 = GRAY, 4 = PINK
PAIR 3 — 5 = RED, 6 = BLUE
PAIR 4 — 7 = BROWN, 8 = WHITE
9 = N/C
10 = N/C
11 = N/C
12 = N/C

M23 connector

FEMALE END VIEW

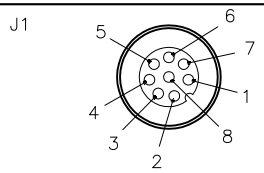

PAIR 1 — 1 = GREEN, 2 = YELLOW
PAIR 2 — 3 = GRAY, 4 = PINK
PAIR 3 — 5 = RED, 6 = BLUE
PAIR 4 — 7 = BROWN, 8 = WHITE

euro fast.

WIRING DIAGRAM

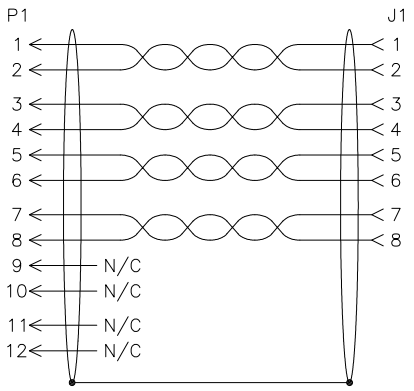

SPECIFICATIONS

CONTACT CARRIER MATERIAL	NYLON OR PBT (P1), NYLON OR TPU (J1)
MOLDED HEAD MATERIAL/COLOR	TPU/BLACK (P1), YELLOW (J1)
CONTACT MATERIAL/PLATING	BRASS/GOLD
COUPLING NUT MATERIAL/PLATING	BRASS/NICKEL
RATED CURRENT [A]	2.0 A
RATED VOLTAGE [V]	60 VAC/75 VDC
OUTER JACKET MATERIAL/COLOR	PVC/BLACK
CONDUCTOR INSULATION MATERIAL	PVC
NUMBER OF CONDUCTORS [AWG]	8x24 AWG (4 TWISTED PAIRS)
DRAIN/SHIELD	24 AWG DRAIN/TINNED-COPPER BRAIDED SHIELD
TEMPERATURE RANGE	-40°C to +105°C (-40°F to +221°F)
PROTECTION CLASS	MEETS IEC IP67

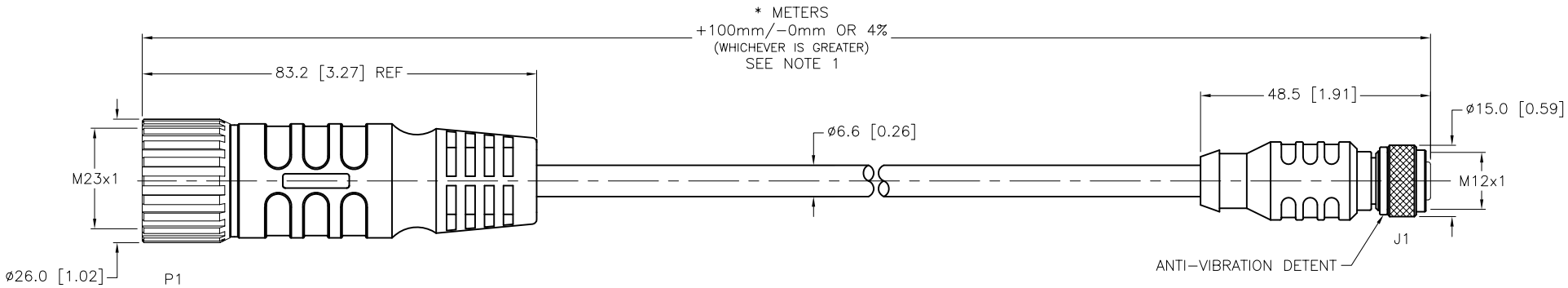

SOURCE DRAWING - FOR REFERENCE ONLY

NOTES:

1. "*" INDICATES CABLE LENGTH IN METERS. CONTACT TURCK TO ORDER SPECIFIC LENGTHS.

REV	DESCRIPTION	BY	DATE	ECO NO.
B	ADD "CCW" TO P1 END VIEW	RDS	08/07/12	39597

RELATED DOCUMENTS
1.
2.
3.
4.

3RD ANGLE PROJECTION

THIS DRAWING IS CONFIDENTIAL AND THE PROPERTY OF TURCK INC. USE OF THIS DOCUMENT WITHOUT WRITTEN PERMISSION IS PROHIBITED.

TURCK INC
High Technology Sensors and Automation Controls
3000 CAMPUS DRIVE
MINNEAPOLIS, MN 55441
1-800-544-7769
(763) 553-7300
(763) 553-0708 fax
turck.com

MATERIAL: SEE SPECIFICATIONS

FINISH: SEE SPECIFICATIONS

ALL DIMENSIONS DISPLAYED ON THIS DRAWING ARE FOR REFERENCE ONLY

CONTACT TURCK FOR MORE INFORMATION

DRFT: KMY | DATE: 11/23/11
APVD: C.K. | SCALE: 1=1.3

UNIT OF MEASUREMENT
MILLIMETER [INCH]
DO NOT SCALE THIS DRAWING

DESCRIPTION: E-CSM 12-264-*-RKE 8T

IDENTIFICATION NO.

REV: B

FILE: 777028354

SHEET 1 OF 1

Approved 08/07/2012, work order #32057 by A.F.